811500024

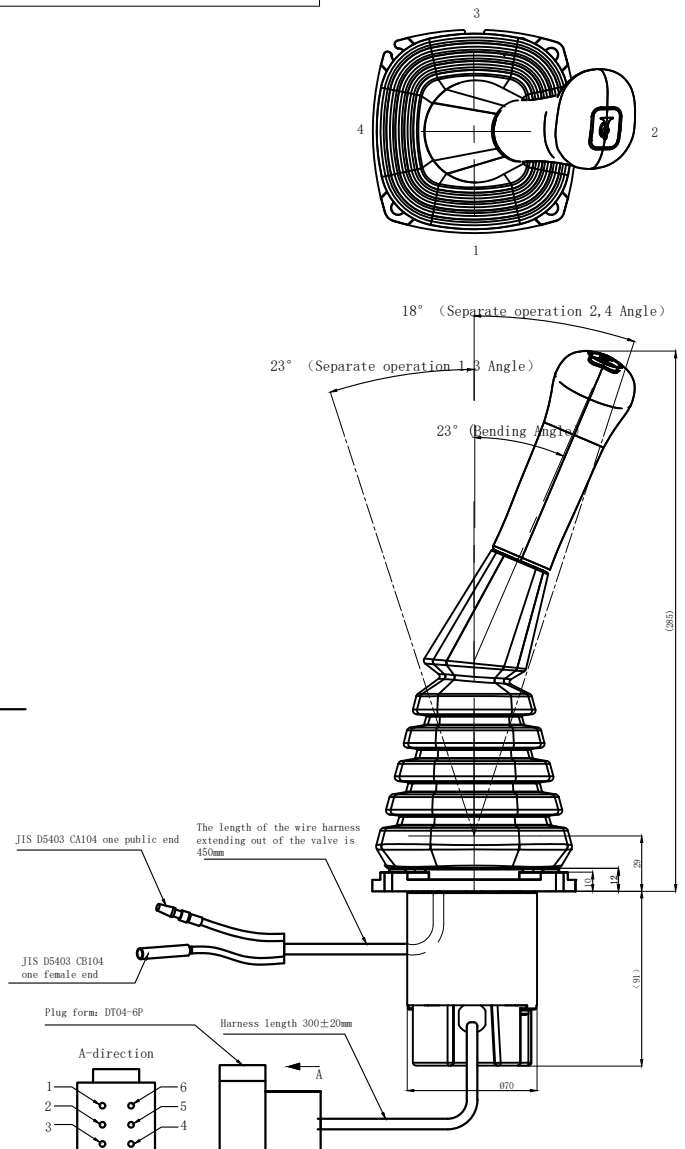

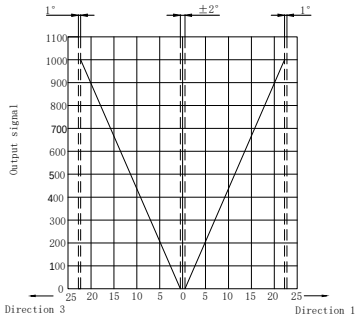

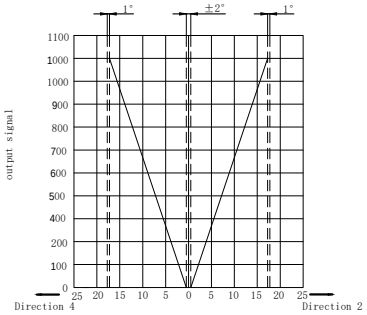

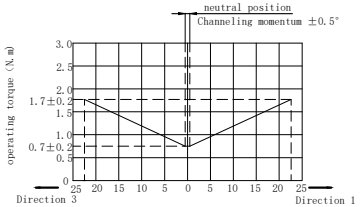

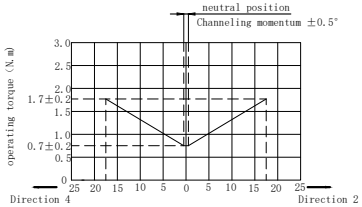

Electrical wiring diagram

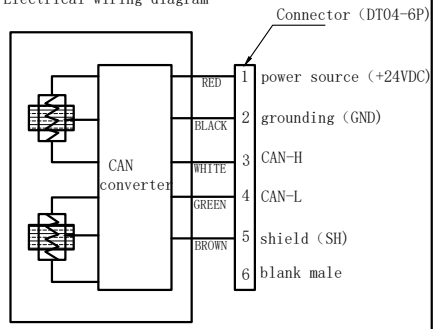

Button switch wiring diagram

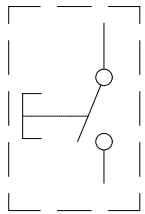

Specifications:

1. Power rules:
   - Power supply voltage: 10~32VDC
   - Current consumption: below 100mA
   - Impulse current: below 10A
2. Signal output:
   - Communication protocol: CAN (SAE J1939) EJM1
   - Source address: 249
   - Communication rate: 250kbps
   - Sampling period: 10ms
   - Output precision:

temperature range	median	+END	-END
-10~50℃	±2%	±1% -2%	+2% -1%
-40~75℃	±3%	+1% -4%	+4% -1%

Hysteresis: less than ±1.6%

3. Mechanical neutral position: below 0.5°
4. Operating temperature range: -40~75℃
5. Maximum operating torque: 226N/m

Instructions for using the switch:

1. Rated voltage and current: DC30V/3A (resistive load)
   : DC30V/1A (resistive load)
   Minimum borrow capacity: DC5V/160mA~DC30V/26mA
   Operating amount/operating force: 1mm/4N (switch 1, 3)
   : 1mm/6N (switch 2)
2. Operating temperature: -40~75℃
3. Color : Black

skills requirement:

1. The connecting part is locked according to the specified torque;
2. The screw connection part of the top cover and the universal joint and the hand Apply thread fastening glue to the handle rod and the connecting head;
3. During the assembly process, at the pin shaft of the universal joint, Apply butter to the contact between the top cover and the ejector pin.

*When the user uses M6 bolts to fix the handle, the maximum torque shall not exceed 11.7N.m

					FP30-2AW-W1-J249-D-A1-L1			Ningbo Flag-up Hydraulic
mark	number	changed file	number	signature	date			Left handle (full electric)
desiner			approver		pattern mark	weight	proportion	
inspector							1:2.8	811500024
craft								
standard			date		version I	visualangle		

借通用件登记

描 图

校 描

旧底图总号

签 字

日 期